KS1250,1,2,3,5,6,7,8PX
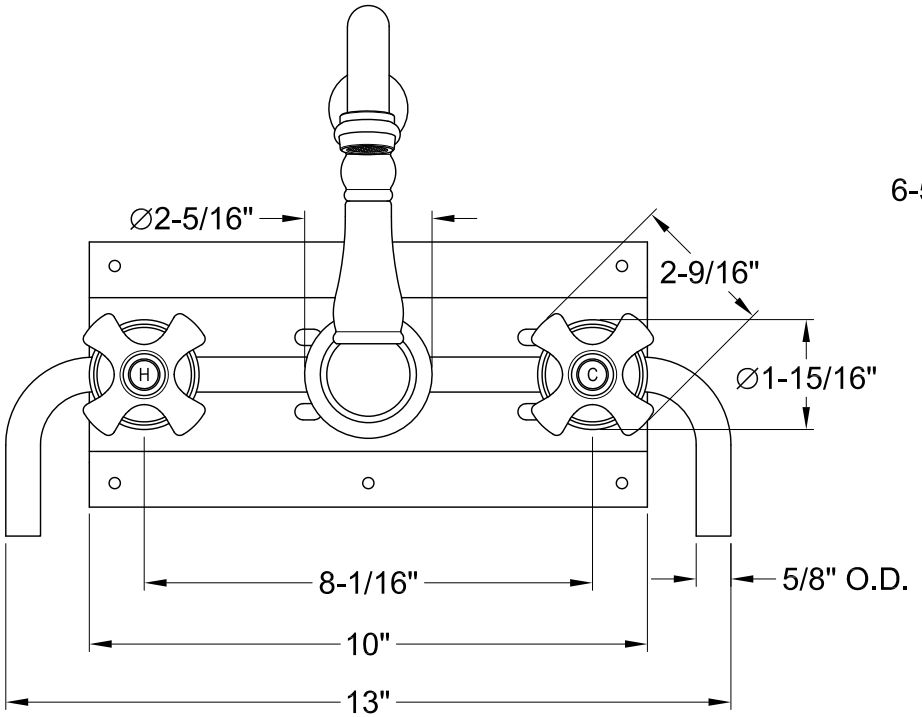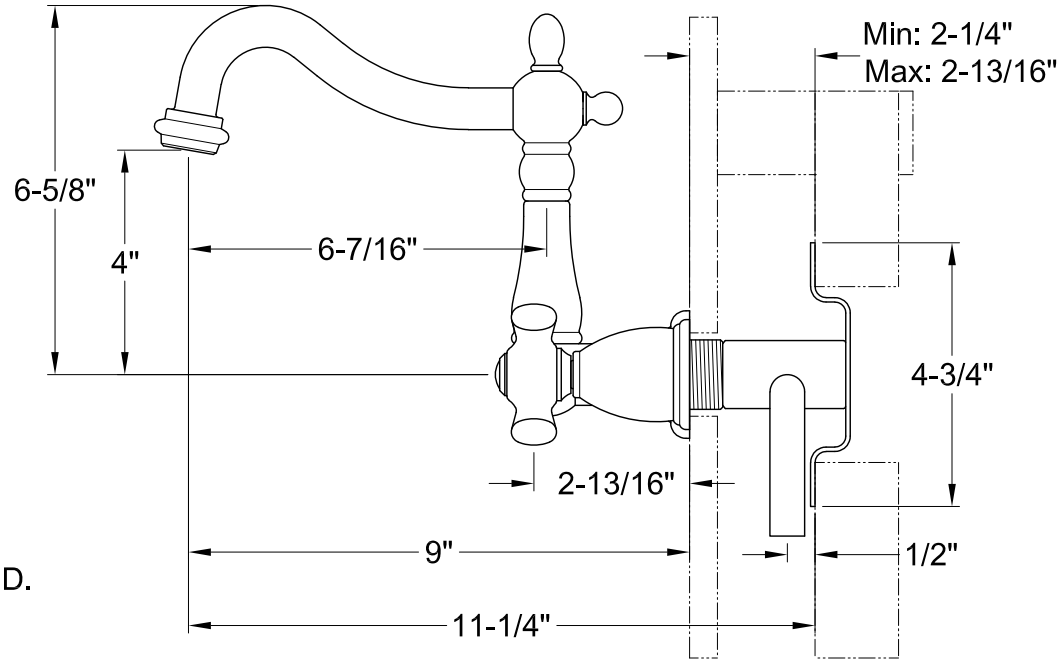
Twin Handles Wall Mount Bathroom Faucet