KVPB30MOQ0,1,6,7

30" Carrara Marble Console Sink

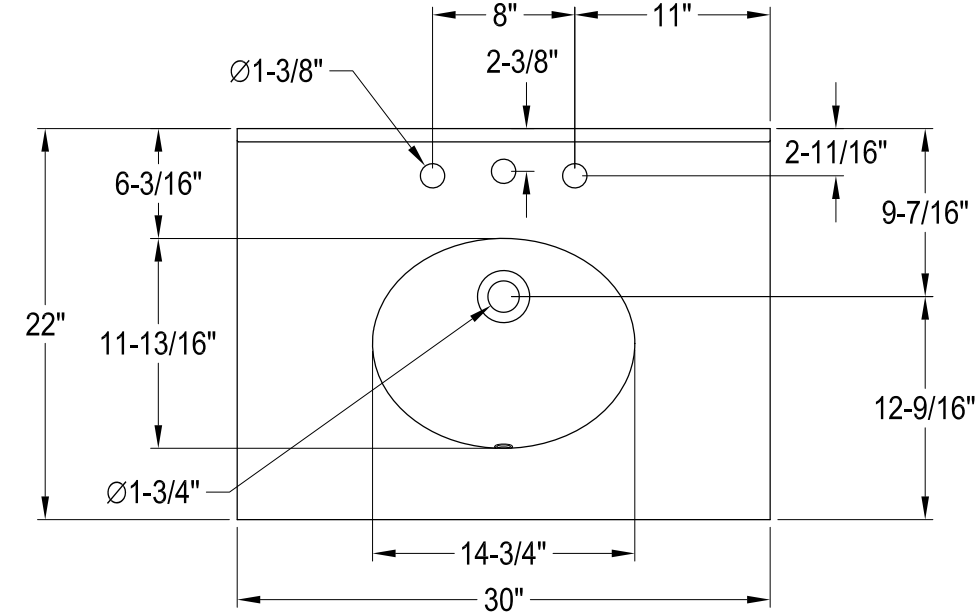

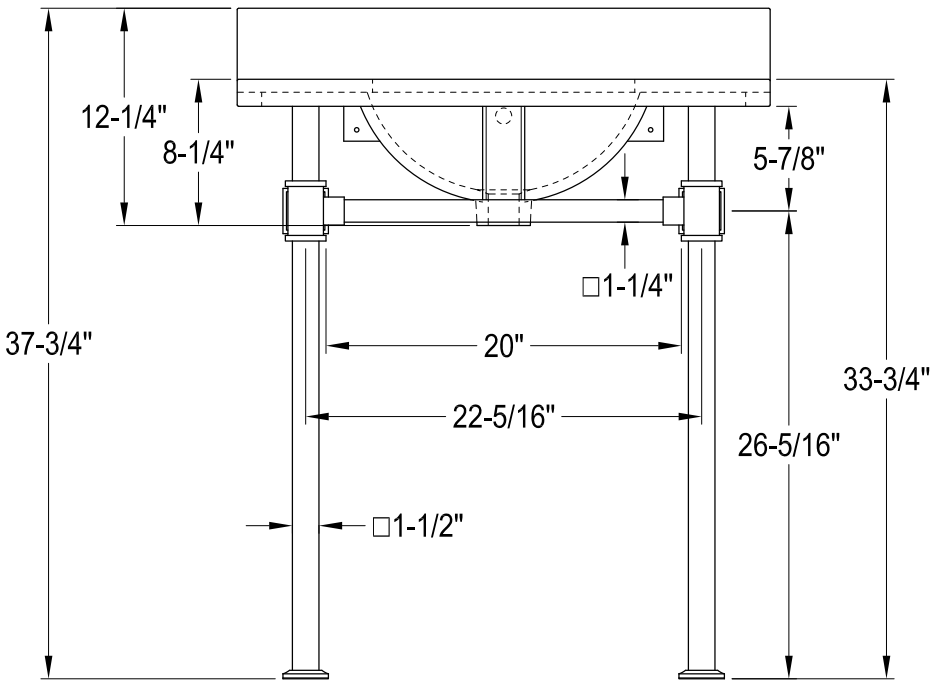

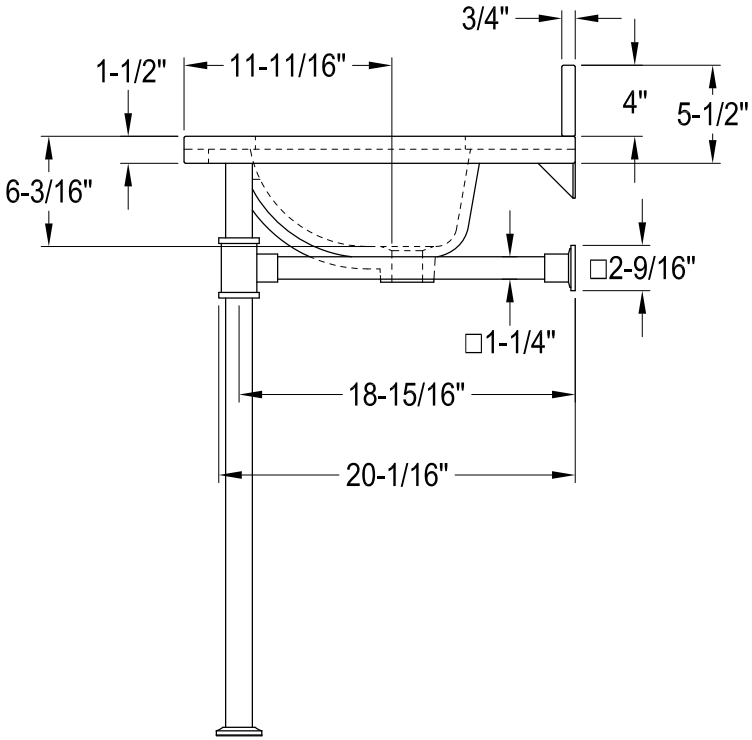

Ref# KVPB30MOQ0,1,6,7 | 2021-02-B