KS1491,2,3,5,6,8PX
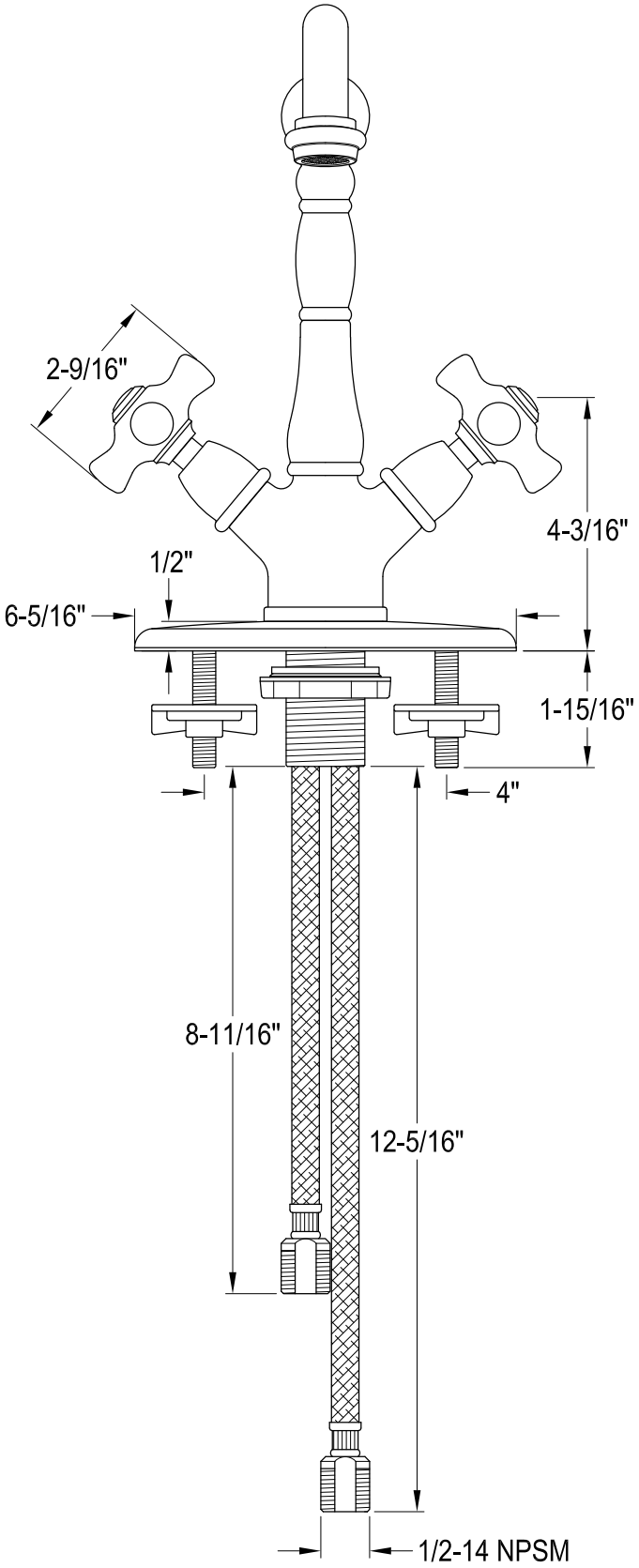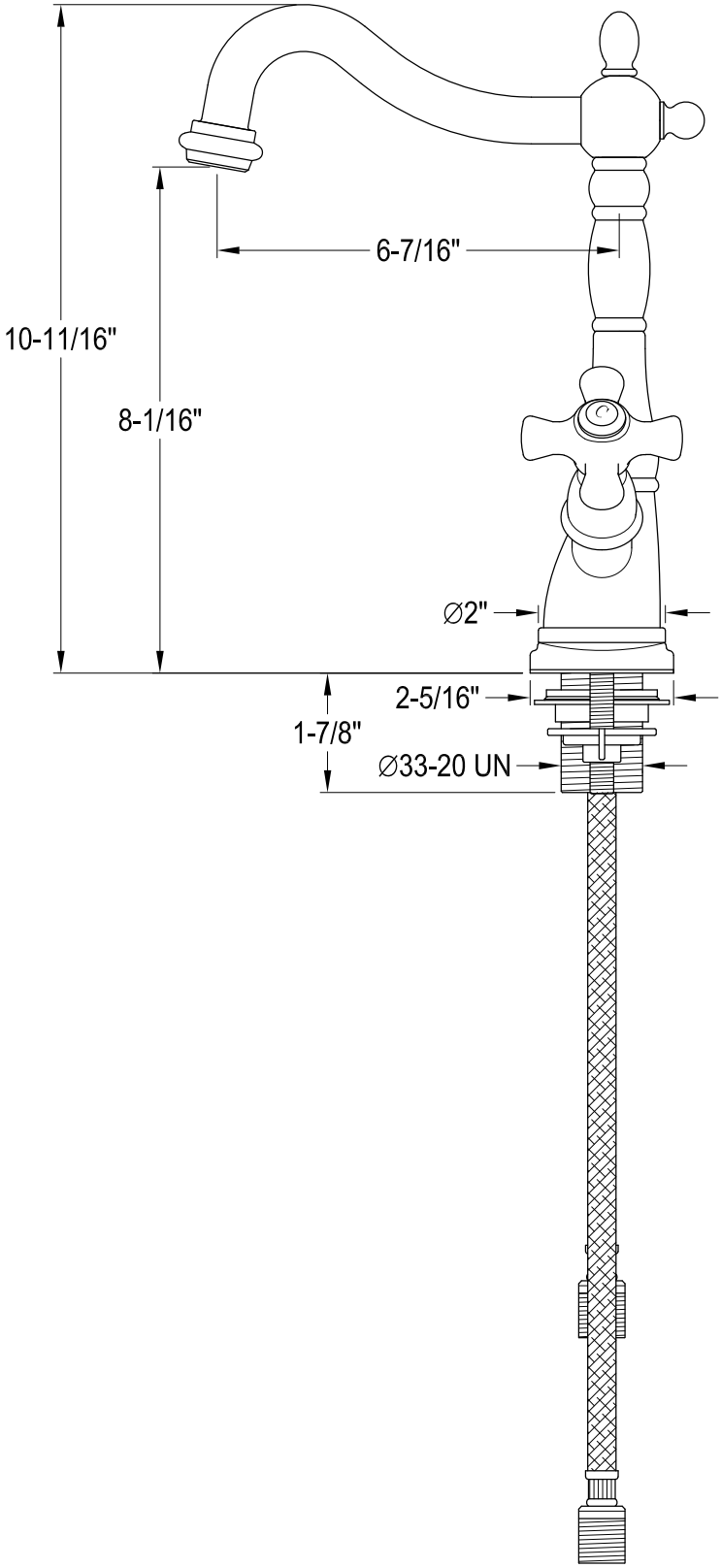
Twin Handles Vessel Sink Faucet